Grenze International Journal of Engineering and Technology, June Issue

Deep Learning based Detection of Alzheimer's Disease

Sampara Emmanuel Arther George[1], Dr. D. Narmadha[2] and Dr. G. Naveen Sundar[3]
[1]Division of Artificial Intelligence and Machine Learning, Karunya Institute of Technology and Sciences, Tamil Nadu, India
Email: samparaemmanuel@karunya.edu.in
[2]Associate Professor, Division of Artificial Intelligence and Machine Learning, Karunya Institute of Technology and Sciences, Tamil Nadu, India
Email: narmadha@karunya.edu
[3]Assistant Professor, Division of CSE, Karunya Institute of Technology and Sciences, Tamil Nadu, India
Email: naveensundar@karunya.edu

***Abstract*—Alzheimer's disease (AD) affects over 5.5 million individuals 65 and older, making it the most prevalent form of dementia and the 6th-most prevalent cause of mortality in the US. This devastating neurodegenerative illness deeply effects patients along with their families, causing a steadily worsening loss of cognitive function. Scientists are currently conducting wide-ranging research, yet no treatment exists. This emphasizes how crucial an accurate and timely diagnosis plays in ensuring successful therapy. This study extensively investigates application of powerful transfer learning methods and advanced convolutional neural networks (CNNs) for detection of AD through analysis of medical imaging data. This approach improves detection accuracy by at least 10 percent while reducing the need for wide-ranging training data. It achieves this by using pre-trained models and state-of-the-art architectures such as Beginning v3. This study shows that convolutional neural networks and transfer learning achieve higher accuracy and greater efficacy in identifying AD-related biomarkers compared to conventional methods. We aim to considerably assist in developing highly dependable and readily expandable early Alzheimer's detection tools through the application of these advanced techniques. This will ultimately allow for immediate intervention and substantially increased patient outcomes**

***Index Terms*— Alzheimer's Detection, Machine Learning, Deep Learning, Convolutional Neural Networks (CNNs), Neurodegenerative disease, Early Diagnosis.**

I. INTRODUCTION

Alzheimer's disease (AD), most prevalent kind of dementia, continues to be a major obstacle in modern healthcare. The main methods for diagnosing Alzheimer's disease include cognitive testing, clinical evaluations, as well as neuroimaging techniques. Brain imaging methods like Positron Emission Tomography (PET) scans as well as Magnetic Resonance Imaging (MRI) are essential for identifying the structural and functional changes in the brain associated with AD. These imaging modalities offer vital information about amyloid plaques, neurofibrillary tangles, and brain atrophy—all of which are important disease biomarkers. Delays in diagnosis and intervention are frequently caused by the time-consuming, subjective, and variable nature of traditional diagnostic techniques.

Clinical evaluations, cognitive testing, and neuroimaging methods have historically been employed in Alzheimer's disease diagnosis.

Grenze ID: 01.GIJET.11.2.488
© Grenze Scientific Society, 2025

Clinical assessments use standardized tests like Montreal Cognitive Assessment (MoCA) as well as Mini-Mental State Examination (MMSE) to evaluate a patient's medical history, behavioural changes, and cognitive deficits. To rule out other possible causes of symptoms, physical and neurological testing are frequently added to these assessments.

In order to detect structural changes in brain, like atrophy within particular areas and accumulating amyloid plaques as well as neurofibrillary tangles, neuroimaging techniques like MRI as well as PET scans are essential. Although these conventional approaches offer insightful information, they can be laborious, prone to interpretation errors, and necessitate a high level of skill, which could cause delays.

In this research, we concentrate on a data-driven method for analysing brain scan pictures using CNNs as well as use of Transfer learning in this case inception v3, which offer useful information for spotting patterns linked to Alzheimer's disease. CNNs can efficiently use the structured data in these pictures, which are frequently acquired using methods like MRI, to identify anomalies associated with AD. As CNNs can recognize and extract different patterns from large volumes of image data, they are very well suited for this task. When compared with the conventional techniques this model is guaranteed to be better at identifying the patterns relating to AD and also classifying them.

II. Literature Survey

Alzheimer’s Disease (AD), a critical healthcare challenge, particularly for the aging population. Thies and Bleiler [1]. provide a comprehensive overview of AD, emphasizing its prevalence, diagnostic challenges, and the burden it places on healthcare systems. This emphasizes how crucial early detection is and how cutting-edge tools like deep learning may help diagnose AD. Hazarika et al. [2]. examine classification algorithms with an emphasis on feature extraction techniques for AD brain imaging. They conclude that CNNs, with their automatic feature extraction capabilities, outperform traditional machine learning techniques in classification accuracy.

Keuck [3]. offers a historical perspective on AD, tracing the evolution of diagnostic methodologies. This historical context underscores the progress made, with CNNs emerging as a promising tool for detecting AD from neuroimaging data. Khan et al. [4]. examine deep learning (DL) and machine learning (ML) approaches for diagnosing brain disorders, highlighting CNNs' role in automating the analysis of MRI and PET scans. CNNs excel at identifying disease patterns that are difficult for humans to discern, because of their capacity to extract hierarchical characteristics from unprocessed imaging data.

Zhang et al. [5]. Survey deep learning techniques for brain disorders neuroimaging, including AD. They note the growing adoption of CNNs for handling high-dimensional imaging data and their success in AD diagnosis, making them a reliable tool in clinical applications. Al-Shoukry et al. [6]. review deep learning algorithms, particularly CNNs, for AD detection. They explore various CNN architectures applied to MRI and PET scans and emphasize the importance of preprocessing techniques like image normalization and augmentation for improved model performance.

Gao and Lima [7]. discuss recent advancements in deep learning for AD detection, focusing on CNNs' ability to analyse medical imaging data. They highlight the potential for high accuracy when large datasets are used for training. Sisodia et al. [8]. review transfer learning approaches for AD detection using MRI images.

They show that transfer learning, when applied to CNNs, improves performance on small datasets, in medical fields, where labelled data can be not abundant, it's very helpful.

Beheshti et al.[9] explore brain age prediction utilizing ML, including CNNs, as an alternative approach to AD detection. This method estimates the brain's age biologically, which can be utilized as an additional feature in AD diagnosis models.

Jin et al. [10]. propose attention-based 3D CNN architecture for AD diagnosis, incorporating attention mechanisms to focus on relevant brain regions in neuroimaging data. This approach enhances the interpretability and accuracy of CNN models by emphasizing critical features for AD detection. Dubois et al.[11] discuss new diagnostic standards for early identification of AD, while Shukla et al. [12] explore learning algorithms for AD diagnosis.

Koh and Parekh [13]. highlight the broader implications of understanding disease burden, and Sarvamangala and Kulkarni [14]. survey CNNs in medical image understanding.

In summary, because CNNs can directly learn characteristics from raw neuroimaging data, they have become a potent tool for AD identification. Techniques like transfer learning and attention-based mechanisms have further improved classification accuracy. It is believed that CNNs' application for AD diagnosis would increase in accuracy and efficacy as they develop further, providing valuable support for clinicians in early detection and intervention.

III. METHODOLOGY

TABLE I. DATASET SPLITTING

Class	Total Images	Training Set (70%)	Validation Set (20%)	Test Set (10%)
Mild Impairment	2630	1841	526	263
Moderate Impairment	2620	1834	524	262
Normal	3200	2240	640	320
Total	8450	5915	1690	845

To enable precise and effective Alzheimer's classification, the AD Detection System is constructed using a methodical and multi-phase approach which incorporates image processing and deep learning. This section describes the methods used for data processing, model building, and evaluation to accomplish the project's objectives.

Data Collection: To guarantee equitable representation across all classes (mild impairment, moderate impairment, and normal), the dataset—which included 8450 MRI images—was split into training, validation, and testing subsets. To maintain the class distribution across all subsets, a stratified splitting technique was applied. In particular, the training set received 70% of the photos, the validation set received 20%, and the testing set received 10%. In addition to being assessed on unseen data during validation and testing, this split guarantees that the model learns efficiently during training. TABLE I provides a summary of the final image distribution for each of the three classes across each subgroup. The model can efficiently generalize across many variants of MRI slices with the help to this careful splitting.

Pre-Processing: To increase neural network training and data homogeneity, sophisticated preprocessing techniques are used. The photos are resized to a standard size, such 224x224 pixels. This will achieve consistency. In order to normalize the pixel values are scaled to a range of [0,1].

The formula (1) for the scaling operation is:

$$X_{scaled} = \frac{X - \min(x)}{\max(X) - \min(X)} \quad (1)$$

Here X is original pixel value. Rotation, flipping, zooming, and brightness adjustments are examples of methods for data augmentation that might be employed to increase dataset diversity and decrease overfitting. Furthermore, the standard deviation σ is divided by the mean μ to standardize pixel values.

The formula (2) for the standardizing the pixel values is:

$$X_{norm} = \frac{X - \mu}{\sigma} \quad (2)$$

Model Architecture: The CNN design enables extraction and learning of complex patterns from brain scan pictures. Convolutional layers are added after an input layer gets the images in order to progressively produce hierarchical patterns by capturing low-level information such as edges and textures. ReLU activation is utilized to give the convolutional layers non-linearity.

The formula (3) for the convolution operation is:

$$f(x) = \max(0, x) \quad (3)$$

Pooling layers, like max-pooling, has the ability to decrease feature map dimensionality while maintaining crucial data. While training, dropout layers randomly deactivate neurons to avoid overfitting. This is done based on retention probability p.

$$\hat{y} = \frac{y}{p} \quad (4)$$

Following the combination of the obtained information using fully connected layers, the output layer classifies the scans into different stages of AD with the help of a SoftMax activation function.

The activation function is calculated with the help of formula (5):

$$p(y = i|x) = \frac{e^{z_i}}{\sum_{j=1}^{C} e^{z_i}} \quad (5)$$

Where z_i represents the raw output for each of the classes and with we will make use of $p(y = i|x)$ we get the predicted probability of class i.

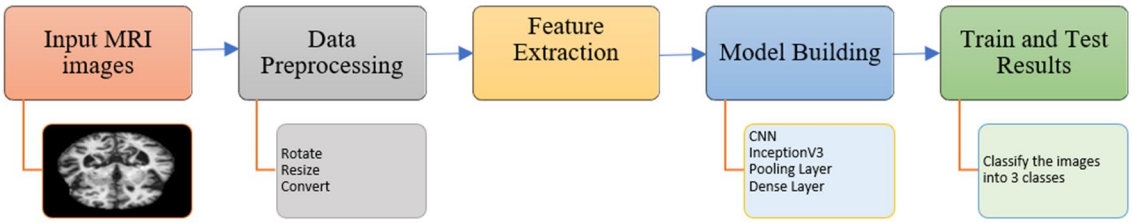

Figure 1. Architecture Diagram

The figure above Fig. 1 shows the process flow of this project and gives a basic architectural picture. Furthermore, the neural network architecture is given by the Fig. 2:

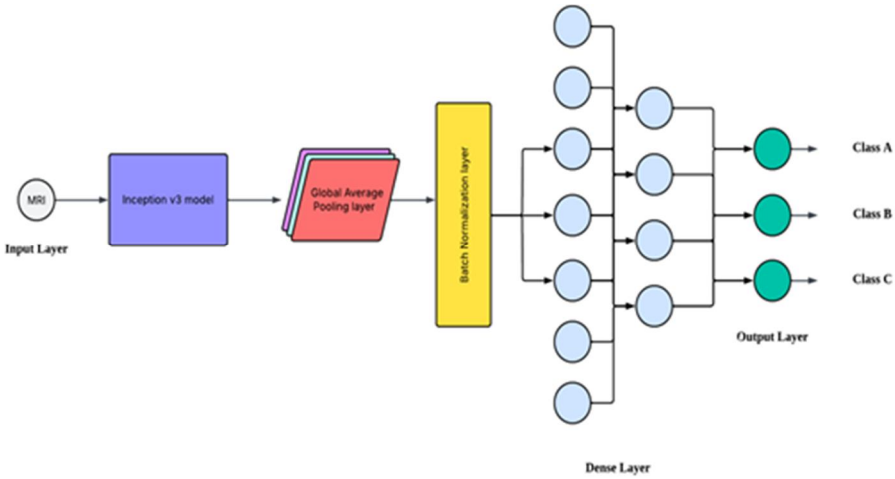

Figure 2. Neural Network Architecture

Model Training and Hyperparameter Tuning: Both training subset as well as loss function—in this case, cross-entropy loss—are utilized to train model. Furthermore, Optimizers like Adam are used so that the loss function can be minimised. An update rule is used for this task.
The formula (6) is used for the rule:

$$\theta_{t+1} = \theta_t - \frac{\eta}{\sqrt{\hat{v}_t} + \epsilon} \hat{m}_t \qquad (6)$$

Where θ_t is the model parameter at a time step "t". The gradient's first as well as second moment estimations are represented by the terms $\hat{m}_t$ and $\hat{v}_t$ respectively and the learning rate is denoted by η.Learning rate schedulers are made use in order to change the rate along the training process dynamically. A suitable batch size is made use to train through several epochs and the performance of the model is kept track of by using hyperparameters and also the validation dataset.
Model Deployment and Iteration**:** Following the completion of model's training as well as testing, model is fine tuned for better performance. During which the best iteration is tracked and saved for future usage. The model is completed and now can be used for the classification tasks

IV. Conclusions

The current study's primary goal was to categorize MRI pictures into classes where we get to know whether the images are of AD or of a healthy brain. In order to know performance of model metrics like Precision(7), Recall(8), F1-scores(9), as well as Accuracy(10) will be used. These metrics will give us a clear picture of the model. Precision is used in order to find out how accurately the model can make positive predictions. For determining value of this we need to divide true positives with total number of positive predictions.

$$Precision = \frac{TP}{TP + FP} \qquad (7)$$

The next metric which is used is called Recall. With this the model's true positive rate is found out. That is how accurate the model is in making true predictions. True positives are calculated by dividing the total of false negatives with true positives.

$$Recall = \frac{TP}{TP + FN} \tag{8}$$

Next metric which is used on the model is F1-score. This measure takes the mean of precision and recall with which the trade-offs are balanced

$$F1_{Score} = 2 * \frac{Precision * Recall}{Precision + Recall} \tag{9}$$

Accuracy is the metric which gives the overall performance of model. It determines how many predictions were accurate overall. In order to calculate this sum of true predictions is divided by the sum of all the predictions. The degree to which a measured value resembles a real or standard value is known as accuracy. Stated otherwise, it is the tool's capacity to measure the precise value, whose accuracy may be assessed.

$$Accuracy = \frac{TP + TN}{TP + FP + TN + FN} \tag{10}$$

With the use of the above-mentioned formulas the metrics are calculated and tabulated. This is represented by the help of Table II.

TABLE II. TRANSFER LEARNING MODEL RESULTS

No	Metric	Mild	Moderate	Healthy
1.	Precision	0.54	0.80	0.84
2.	Recall	0.36	0.33	0.47
3.	F1-Score	0.43	0.47	0.88

By using the values obtained by calculations of accuracy and other metrics plots are made for visualizing performance of model more effectively. The below given graphs represent model's accuracy and the model's loss. By use of these metric it shows that the architecture of CNN followed by use of Transfer learning helps in accurately predicting AD from the MRI images. To enhance accuracy even more fine tuning is implemented. By doing so we can leverage the knowledge of the model and tune for a specific task. The graphs below show the results after fine tuning. The accuracy and loss of the model are represented by the Fig. 3 and Fig. 4 below.

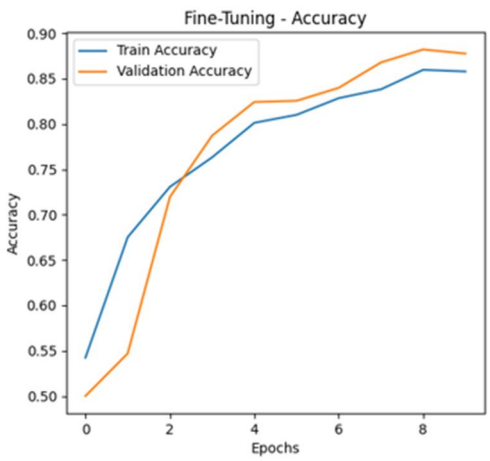

Figure 3. Model Accuracy

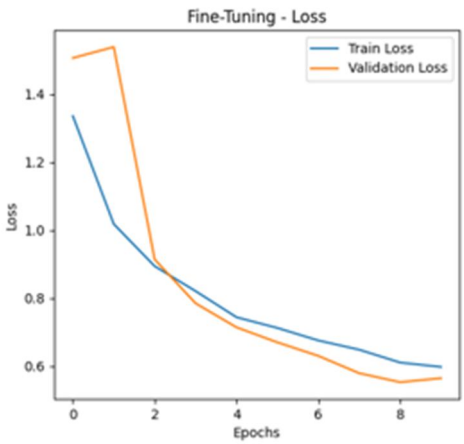

Figure 4. Model Loss

ACKNOWLEDGMENT

The author wishes to thank Dr. D. Narmadha and Dr. G. Naveen Sundar for their valuable support and contributions to this research.

REFERENCES

[1] W. Thies and L. Bleiler, "2013 Alzheimer's disease facts and figures," Alzheimer's & dementia, vol. 9, no. 2, pp. 208-245, 2013.

[2] R. A. Hazarika et al., "A survey on classification algorithms of brain images in Alzheimer's disease based on feature extraction techniques," IEEE Access, vol. 9, pp. 58503-58536, 2021.

[3] L. Keuck, "History as a biomedical matter: Recent reassessments of the first cases of Alzheimer's disease," History and Philosophy of the Life Sciences, vol. 40, no. 1, p. 10, 2018.

[4] P. Khan et al., "Machine learning and deep learning approaches for brain disease diagnosis: principles and recent advances," IEEE Access, vol. 9, pp. 37622-37655, 2021.

[5] L. Zhang et al., "A survey on deep learning for neuroimaging-based brain disorder analysis," Frontiers in neuroscience, vol. 14, p. 779, 2020.

[6] S. Al-Shoukry, T. H. Rassem, and N. M. Makbol, "Alzheimer's diseases detection by using deep learning algorithms: a mini-review," IEEE Access, vol. 8, pp. 77131-77141, 2020.

[7] S. Gao and D. Lima, "A review of the application of deep learning in the detection of Alzheimer's disease," International Journal of Cognitive Computing in Engineering, vol. 3, pp. 1-8, 2022.

[8] P. S. Sisodia et al., "A review of deep transfer learning approaches for class-wise prediction of Alzheimer's disease using MRI images," Archives of Computational Methods in Engineering, vol. 30, no. 4, pp. 2409-2429, 2023.

[9] I. Beheshti et al., "Predicting brain age using machine learning algorithms: A comprehensive evaluation," IEEE Journal of Biomedical and Health Informatics, vol. 26, no. 4, pp. 1432-1440, 2021.

[10] D. Jin et al., "Attention-based 3D convolutional network for Alzheimer's disease diagnosis and biomarkers exploration," in 2019 IEEE 16th International Symposium on Biomedical Imaging (ISBI 2019), pp. 1047-1051, 2019.

[11] B. Dubois, G. Picard, and M. Sarazin, "Early detection of Alzheimer's disease: new diagnostic criteria," Dialogues in Clinical Neuroscience, vol. 11, no. 2, pp. 135-139, 2009.

[12] G. P. Shukla, S. Kumar, S. K. Pandey, R. Agarwal, N. Varshney, and A. Kumar, "Diagnosis and detection of Alzheimer's disease using learning algorithm," Big Data Mining and Analytics, vol. 6, no. 4, pp. 504-512, 2023.

[13] H. K. Koh and A. K. Parekh, "Toward a United States of health: implications of understanding the US burden of disease," JAMA, vol. 319, no. 14, pp. 1438-1440, 2018.

[14] D. R. Sarvamangala and R. V. Kulkarni, "Convolutional neural networks in medical image understanding: a survey," Evolutionary Intelligence, vol. 15, no. 1, pp. 1-22, 2022.